TROX® TECHNIK
The art of handling air

PLASTIC SHUT-OFF DAMPER WITH FLANGE (AKK-FL)

Variant with electric actuator

VARIANT WITH CIRCULAR SPIGOT

Variant with circular spigot

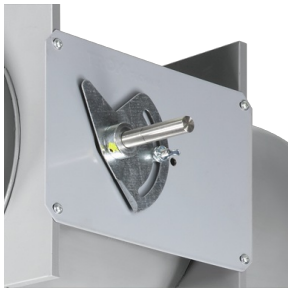

VARIANT FOR MANUAL OPERATION

Variant for manual operation

TESTED TO VDI 6022

Tested to VDI 6022

AKK

FOR CONTAMINATED AIR

Plastic circular shut-off dampers for shutting off aggressive media volume flows in air conditioning systems

- Maintenance-free damper blade mechanism
- Closed blade air leakage to EN 1751, class 3
- Casing air leakage to EN 1751, class B

Optional equipment and accessories

- Electric actuator
- Spring return actuator
- Pneumatic actuator
- Auxiliary switch with adjustable switching points for capturing the end positions

General information

Application

- Plastic circular shut-off dampers Type AKK for shutting off or restricting the airflow in ventilation ducts of air conditioning systems
- Suitable for contaminated air

Special features

- Damper blade can be actuated manually, electrically or pneumatically
- Low-leakage shut-off
- Safety function provided by optional spring return actuator

Nominal sizes

- 125, 160, 200, 250, 315, 400

Variants

- AKK: Shut-off damper
- AKK-FL: Shut-off damper with flanges on both ends

Parts and characteristics

- Ready-to-install shut-off damper
- Damper blade with blade mechanism

Attachments

- Open/Close actuators: For the opening and closing of shut-off dampers in air conditioning systems
- Auxiliary switch for capturing the end positions

Accessories

- Matching flanges for both ends, including seals

Technical data

- Nominal sizes: 125 – 400 mm
- Acceptable static differential pressure: 1500 Pa

Standards and guidelines

- Meets the hygiene requirements of VDI 6022
- Closed blade air leakage to EN 1751, class 3
- Meets the general requirements of DIN 1946, part 4, with regard to the acceptable closed blade air leakage
- Casing air leakage to EN 1751, class B

Maintenance

- Maintenance-free, as construction and materials are not subject to wear and tear

TECHNICAL INFORMATION

Functional description
For airtight shut-off of volume flows in round plastic air ducts - typically for contaminated extract air in laboratories. The basic version is shut off by manually actuating the damper blade. Electrically or pneumatically operated actuators, which are available in different versions, can also be used to operate the damper blade. The versions differ with regard to the power supply and safety position (de-energised or de-pressurised state). Actuators with auxiliary switches for electrical monitoring of the damper blade position are also available.

The actuator of a damper blade must be controlled by a customer-side circuit and then moves the damper blade to the OPEN or CLOSED position.

AKK: schematic diagram (version with flange)

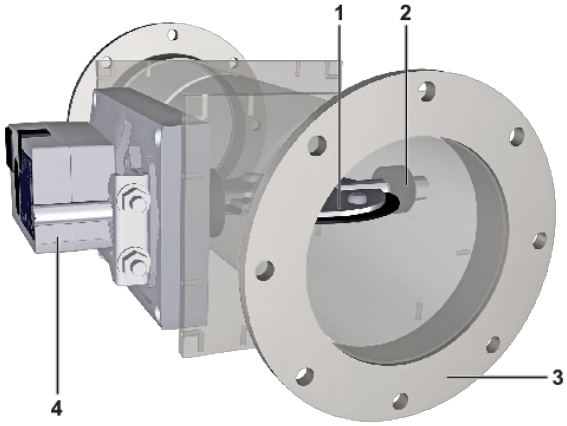

1 Damper blade

2 Plain bearings

3 Flange (optional)

4 Actuator (optional)

Nominal sizes	125 – 400 mm
Acceptable static differential pressure	1500 Pa
Operating temperature	10 – 50 °C
Nominal sizes	125 – 400 mm
Permissable static differential pressure	1500 Pa
Operating temperature	10 – 50 °C

Circular shut-off dampers in PPs plastic for air conditioning systems, available in 6 nominal sizes. Suitable for shutting off or restricting extract air flows containing aggressive substances since all components coming into contact with the airflow are made of plastic (no interior metal parts).

Suitable for duct pressures up to 1500 Pa.

Ready-to-install unit consists of the casing with a damper blade.

Spigot, suitable for ducts according to DIN 8077.

Position of the damper blade indicated externally at the shaft extension.

Closed blade air leakage to EN 1751, class 3.

Casing air leakage to EN 1751, class B.

Special features

- Damper blade can be actuated manually, electrically or pneumatically
- Low-leakage shut-off
- Safety function provided by optional spring return actuator

Materials and surfaces

- Casing and damper blade made of flame-resistant
- polypropylene (PPs)
- Plain bearings made of polypropylene (PP)
- Damper blade seals in chloroprene rubber (CR)

Technical data

- Nominal sizes: 125 – 400 mm
- Acceptable static differential pressure: 1500 Pa

Sizing data

- q_v [m³/h]

Air-regenerated noise

- LPA [dB(A)]

AKK	–	FL	/	160	/	GK	/	BP0	/	NO
|		|		|		|		|		|
1		2		3		4		5		6

1 Type
AKK Shut-off damper, plastic

2 Flange
No entry: none
FL Flanges on both ends

3 Nominal size [mm]
125, 160, 200, 250, 315, 400

4 Accessories
No entry: without accessories
GK Matching flanges both ends

5 Actuator
No entry: Shut-off damper, manually adjustableOpen/Close actuators
B30 24 V AC/DC, 3-point
B32 24 V AC/DC, 3-point, with auxiliary switch
B40 230 V AC, 3-point
B42 230 V AC, 3-point, with auxiliary switchOpen/Close actuators with safe position
BP0 24 V AC/DC, spring return
BP2 24 V AC/DC, spring return, with auxiliary switch
BR0 24 - 240 V AC, 24 - 125 V DC, spring return
BR2 24 - 240 V AC, 24 - 125 V DC, spring return, with auxiliary switchModulating actuators
B20 24 V AC/DC, modulating, 2 – 10 V DCPneumatic actuator with safe position
B22 24 V AC/DC, modulating, 2 – 10 V DC, with auxiliary switch
Pneumatic actuator with safe position
TN0 Pneumatic actuator 0.2 – 1 bar

6 Damper blade position
Only with spring return actuator or pneumatic actuator
NO pressure off/power off to OPEN (Normally Open)
NC power off/pressure off to CLOSE (Normally Closed)Order example: AKK-FL/160/GK/BP0/NO

Order example: AKK-FL/160/GK/BP0/NO

Type	AKK
Flange	Flanges on both ends
Nominal size [mm]	160
Accessories	Matching flanges both ends
Actuator	24 V AC/DC, spring return actuator
Nominal size	pressure off/power off to OPEN (Normally Open)